5. Exploded Views and Parts List

- Deal drawings and service parts are declared for the items with higher rate of inferiority and replaceable in the level of service description only.
- If inferiority occurs, you can replace the parts by the unit declared in deal drawings and service items.

Way to observe Part Code & Description

Part code and Description is quoted and controlled by determined standard. Refer to this determined standard, it will help with ordering Part.

• There are two kinds of Part code inscription type.

●●●–●●●●●●	ex) 2007-007961	R-CHIP
■■●●–●●●●●■ (It shows part specific)	ex) JB96-01268A	ELA UNIT-COVER TOP

(● : figure, ■ : character (alphabet))

Type 1 : Controlled by Company : It can be commonly used for all kinds of product SEC produce. Mostly, electronics Parts.

Type 2 : Controlled by Division : It is used or one produce. Mostly, Mostly, mechanical Parts.

• A/S privately used part : It is only used for A/S **.**

• Ass'y part : Assembled by more than 2 Parts. If necessary part is not A/S Part, Ass'y part including necessary par can be used. It is shown in the diagram and drawing of SVC manual.

• Ass'y part and A/S privately used Part is distinguished by part Code and Description. The are inscription type 2. It is recognized by Part character and front side of description.

DIVISION	PART CODE	DESCRIPTION
A/S Private	**81-****** (JB81-00039A)	AS-***** (AS-USE)
ASS'Y Part	**75-****** (JB75-00068A)	MEC-***** (MEC-CHUTE)
ASS'Y Part	**92-****** (JB92-01131A)	PBA ****** (PBA MAIN-CONTROLLER)
ASS'Y Part	**97-****** (JB97-01089A)	MEA ****** (MEA UNIT-PULLEY IDLE)

IT-Spares.eu

5-1 Exploded Views and Parts List

: Service Passibility Parts

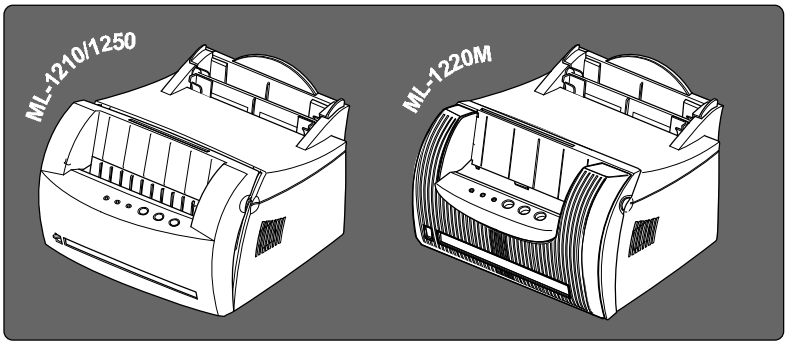

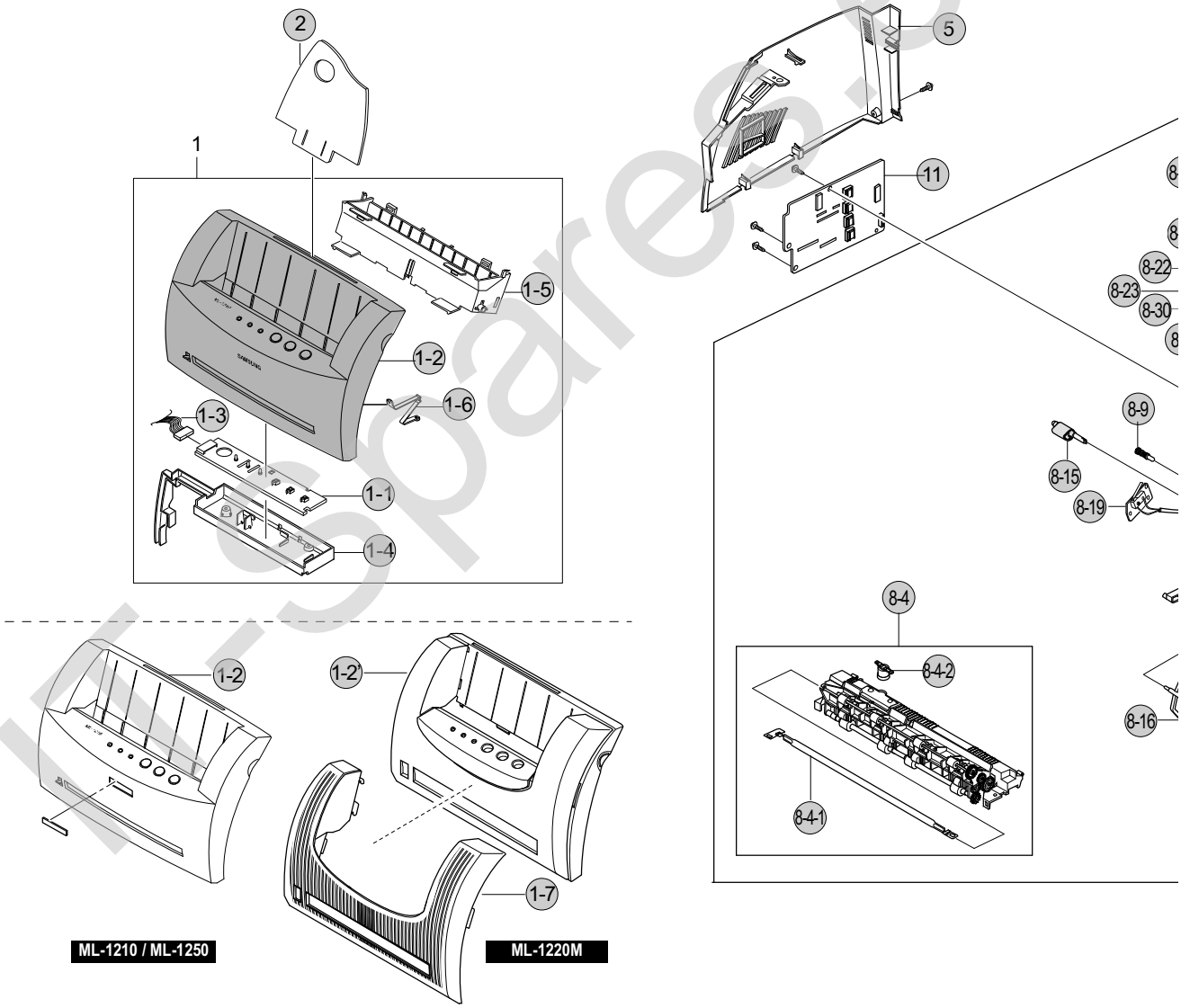

HP-Spares.eu

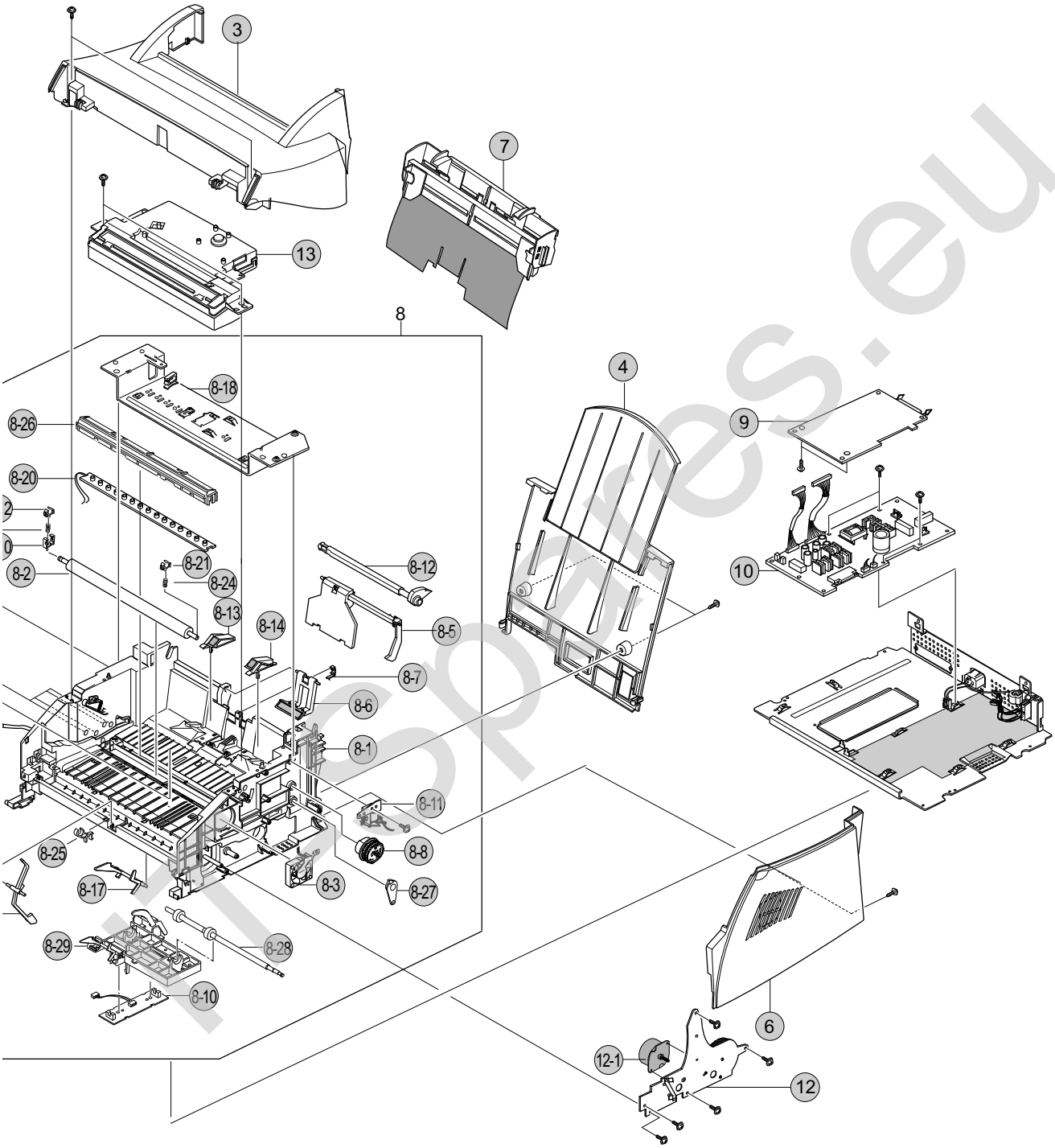
3
7
13
8
8-18
8-26
8-20
8-2
8-21
8-24
8-13
8-14
8-12
8-5
8-7
8-6
8-1
8-11
8-8
8-25
8-17
8-3
8-27
8-29
8-28
8-10
4
9
10
6
12-1
12

itspares.eu

Exploded Views and Parts List

SA : Service Available
O : Service available **X** : Service not available

No.	Description	SEC.Code	Q'ty	SA	Remark
1	ELA UNIT-CVR FRONT	*	1	X	
1-1	PBA SUB-LED PANEL	JC92-01280A	1	O	
1-2	PMO-COVER FRONT	refer to the table ⇒	1	O	
1-3	CBF HARNESS-FRONT PANEL	JC39-00112C	1	O	
1-4	PMO-COVER PCB	JC72-00678A	1	O	
1-5	PMO-GUIDE STACKER	JC72-00511A	1	O	
1-6	PMO-STOPPER	JC72-00519A	1	O	
1-7	PMO-COVER FRONT, SUB IMAC	JC72-00843A	1	O	ML-1220M ONLY
2	PMO-STACKER RX	JC72-00302A	1	O	ML-1210,1250
	PMO-STACKER RX	JC72-00302C	1	O	ML-1220M
3	PMO-COVER TOP	JC72-00522A	1	O	
4	PMO-COVER REAR	JC75-00094A	1	O	
5	PMO-COVER SIDE(L)	JC72-00523A	1	O	
6	PMO-COVER SIDE(R)	JC72-00524A	1	O	
7	MEC-TRAY(P)	JC75-00099A	1	O	ML-1210,1250
	MEC-TRAY(P)	JC75-00099D	1	O	ML-1220M
8	ELA UNIT-FR LOWER	*	1	X	
8-1	PMO-FRAME LOWER	JC72-00533A	1	O	
8-2	MEC-ROLLER_TRANSFER	JC75-00129A	1	O	
8-3	FAN-DC	3103-001085	1	O	
8-4	ELA HOU-FUSER ASS'Y	JC81-00424A	1	O	220V
	ELA HOU-FUSER ASS'Y	JC81-00423A	1	O	110V
8-4-1	LAMP-HALOGEN	4713-001136	1	O	220V
	LAMP-HALOGEN	4713-001135	1	O	110V
8-4-2	THERMOSTAT	4712-000001	1	O	125 / 250V
8-5	MEC KNOCKUP-ASS'Y	JC75-00053A	1	O	
8-6	MEC UNIT HOLDER PAD	JC97-01486A	1	O	
8-7	PMO-CAP_PAD	JC72-00124A	1	O	
8-8	MEC GEAR-PICK UP	JC75-00056A	1	O	
8-9	MEC-TERMINAL	JC75-00049A	5	O	
8-10	PBA MAIN-SENSOR	JC92-01197A	1	O	
8-11	SOLENOID	JC33-00002B	1	O	
8-12	MEC-CAM PICK UP	JC75-00072A	1	O	
8-13	MEC-SIDE PAD(L)	JC75-00050B	1	O	
8-14	MEC-SIDE PAD(R)	JC75-00051B	1	O	
8-15	MEA ETC-ROLLER PICK UP	JC97-01308A	1	O	
8-16	PMO-ACTUATOR-EXIT	JC72-00130A	1	O	
8-17	PMO-ACTUATOR-FEED	JC72-00119A	1	O	
8-18	MEC-PLATE UPPER	JC75-00111A	1	O	
8-19	ELA HOU-OPEN SENSOR	JC96-01584A	1	O	
8-20	ELA HOU-PTL ASS'Y	JC96-02037A	1	O	

ITspares.eu

Exploded Views and Parts List

SA : Service Available
O : Service available **X** : Service not available

No.	Description	SEC.Code	Q'ty	SA	Remark
8-21	PMO-BUSHING_TR(R)	JC72-00101A	1	O	
8-22	PMO-BUSHING_TR(L)	JC72-00102A	1	O	
8-23	SPRING-TR, L	JC61-00458A	1	O	
8-24	SPRING-TR (300)	JC61-00024A	1	O	
8-25	PMO-HOLDER_EXIT	JC72-00532A	1	O	
8-26	PMO-COVER PTL	JC72-00534A	1	O	
8-27	PMO-BUSHING SHAFT	JC72-40849A	1	O	
8-28	MEC-ROLLER FEED	JC75-00054A	1	O	
8-29	EMC-HOLDER FEED	JC75-00055A	1	O	
8-30	PMO-HOLDER TR	JC72-00100D	1	O	
9	PBA MAIN-CONTROLLER GDI	JC92-01316D	1	O	ML-1210
	PBA MAIN-CONTROLLER PCL	JC92-01333A	1	O	ML-1250
	PBA MAIN-ML-1220M IMAC(SUB)	JC92-01316C	1	O	ML-1220M
10	SMPS-ML-1210 V2	JC44-00026A	1	O	220V
	SMPS-ML-1210 V1	JC44-00025A	1	O	110V
11	SMPS-HVPS	JC44-00024A	1	O	ML-1210/1220M
	SMPS-HVPS	JC44-00036A	1	O	ML-1250
12	ELA UNIT-RX DRIVE	JC96-02125A	1	O	
12-1	MOTOR-STEP 7.5	JC31-00005B	1	O	
13	UNIT-LSU	JC59-00015A	1	O	ML-1210/1220M
	UNIT-LSU	JC59-00015B	1	O	ML-1250

IT-Spares.eu

5-2 Front Assembly

: Service Passibility Parts

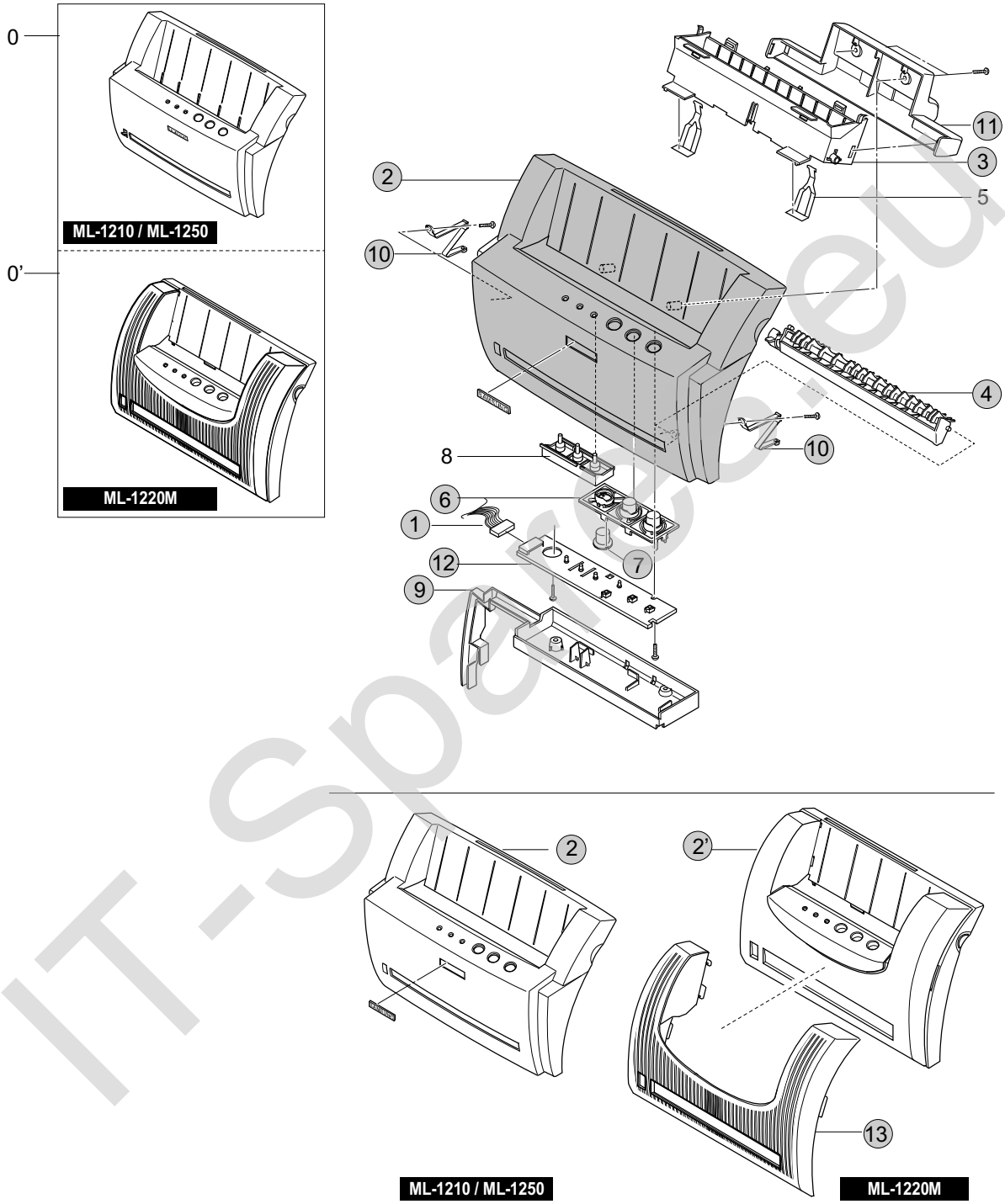

IT-Spareseu

Front Assembly and Parts List

SA : Service Available
O : Service available **X** : Service not available

No.	Description	SEC.Code	Q'ty	SA	Remark
0	ELA HOU-COVER FRONT	*	1	X	
	ELA HOU-COVER FRONT	*	1	X	
1	CBF-HARNESS-PANEL MAIN	JC39-00146A	1	O	
2	PMO-COVER FRONT	JC72-00841A	1	O	
2-1	PMO-COVER-FRONT, SUB IMAC	JC72-00843A	1	O	
3	PMO-GUIDE STACKER	JC72-00511A	1	O	
4	PMO-DOOR FACE UP	JC72-00513A	1	O	
5	PPR-SHEET PAPER GUIDE	*	1	X	
6	PMO-KEY A	JC72-00515A	1	O	
7	PMO-KEY B	JC72-00516A	1	O	
8	PMO-LENS SED	*	1	X	
9	PMO-COVER PCB	JC72-00678A	1	O	
10	PMO-STOPPER	JC72-00519A	1	O	
11	PMO-BRKT PUSH DEVE	JC72-00577A	1	O	
12	PBA SUB DISP-PANEL	JC92-01280A	1	O	
13	PMO-COVER FRONT, SUB IMAC	JC72-00843A	1	O	

IT-Spares.eu

5-3 Engine/Frame Lower Assembly

: Service Passibility Parts

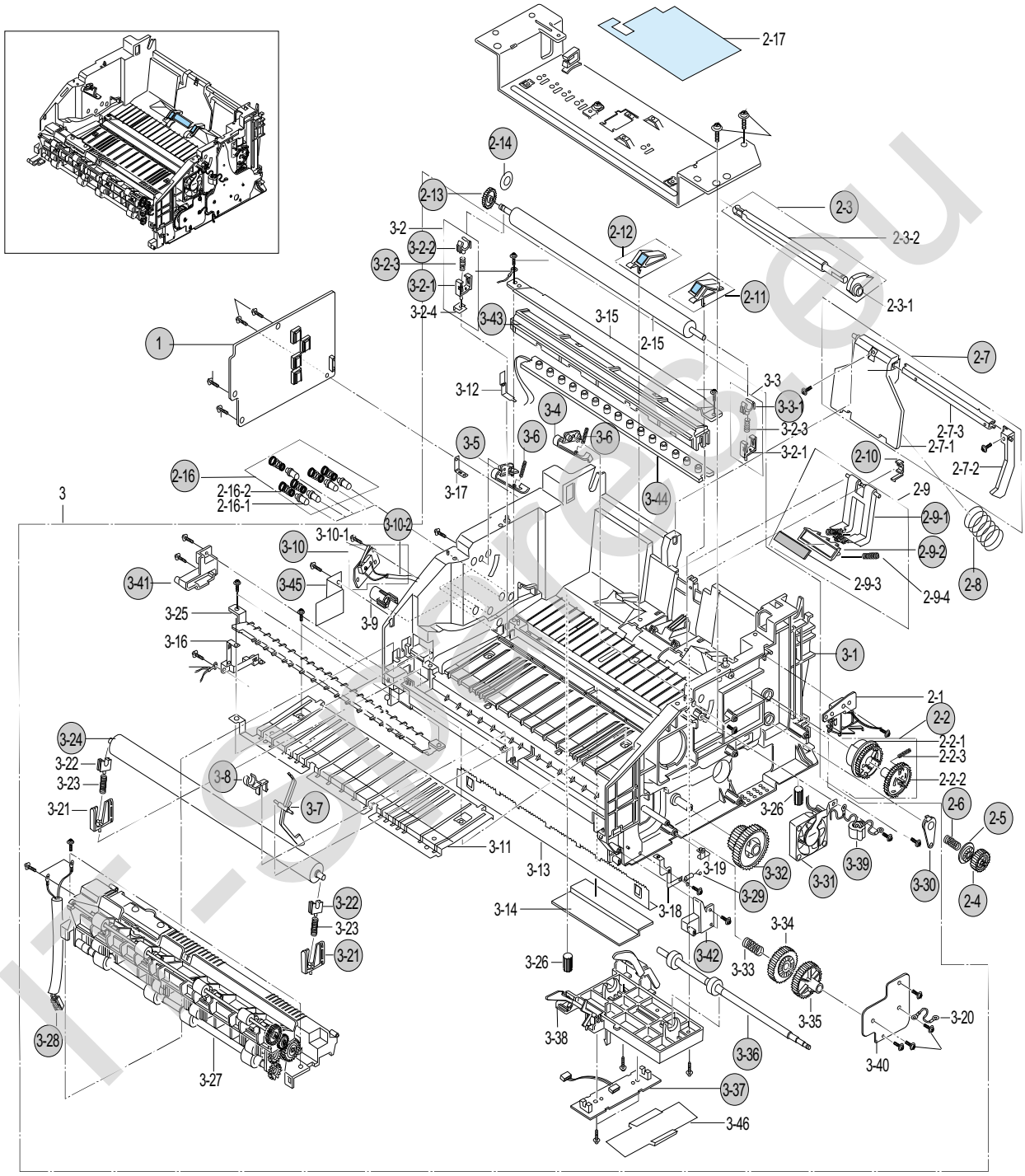

Engine/Frame Lower Assembly and Parts List

SA : Service Available
O : Service available **X** : Service not available

No.	Description	SEC.Code	Q'ty	SA	Remark
1	SMPS-HVPS	JC44-00024A	1	O	
2	ELA HOU-ENGINE ASS'Y	*	1	X	
2-1	SOLENOID-(APOLLO)	*	1	X	
2-2	MEC-GEAR PICKUP	JC75-00056A	1	O	
2-2-1	PMO-GEAR_PICKUP,1	*	1	X	
2-2-2	PMO-GEAR_PICKUP,2	*	1	X	
2-2-3	SPRING-PICKUP,GEAR	*	1	X	
2-3	MEC-CAM PICKUP	JC75-00072A	1	O	
2-3-1	PMO-CAM_PICKUP	*	1	X	
2-3-2	PMO-SHAFT_PICKUP	*	1	X	
2-4	PMO-GEAR_FEED	JC72-00115A	1	O	
2-5	PMO-CLUTCH_FEED	JC72-00116A	1	O	
2-6	SPRING-CLUTCH	JC61-00012A	1	O	
2-7	MEC-KNOCKUP ASS'Y	JC75-00053A	1	O	
2-7-1	PMO-PLATE_KNOCKUP	*	1	X	
2-7-2	PMO-CAM-KNOCKUP	*	1	X	
2-7-3	IPR-BAR_KNOCKUP	*	1	X	
2-8	SPRING-KNOCK UP	JC61-00023A	1	O	
2-9	MEC-HOLDER PAD	*	1	X	
2-9-1	PMO-HOLDER_PAD, L	JC72-00126B	1	O	
2-9-2	PMO-HOLDER_PAD, R	JC72-00125B	1	O	
2-9-3	RPR-PAD FRICTION	*	1	X	
2-9-4	SPRING-PAD	*	1	X	
2-10	PMO-CAP_PAD	JC72-00124A	1	O	
2-11	MEC-SIDE PAD(R)	JC75-00051B	1	O	
2-12	MEC-SIDE PAD(L)	JC75-00050B	1	O	
2-13	PMO-GEAR_TRANSFER	JC72-00179A	1	O	
2-14	PPR-SPACER DR	JC72-00288A	1	O	
2-15	MEC-TRANSFER ROLLER	*	1	X	
2-16	MEC-TERMINAL	JC75-00049A	1	O	
2-16-1	TERMINAL	*	1	X	
2-16-2	SPRING-HV APOLLO	*	1	X	
2-17	PCT-INSULATOR ENG B'D	*	1	X	
S-1	SCREW-TAPTITE	*	1	X	
3	ELA HOU-FRAME LOWER	*	1	X	
3-1	PMO-FRAME LOWER	JC72-00533A	1	O	
3-2	MEA ETC-HOLDER TR L	*	1	X	
3-2-1	PMO-HOLDER TR	JC72-00100D	1	O	
3-2-2	PMO-BUSHING_TR(L)	JC72-00102A	1	O	
3-2-3	SPRING-TR	JC61-00458A	1	O	
3-2-4	IPR-PLATE_TR	*	1	X	

ITSpares.eu

Engine/Frame Lower Assembly and Parts List

SA : Service Available
O : Service available X : Service not available

No.	Description	SEC.Code	Q'ty	SA	Remark
3-3	MEA ETC-HOLDER TR R	*	1	X	
3-2-1	PMO-HOLDER TR	JC72-00100D	1	O	
3-3-1	PMO-BUSHING_TR(R)	JC72-00101A	1	O	
3-2-3	SPRING-TR	JC61-00458A	1	O	
3-4	PMO-CAP PLTE GU/DEV R	JC72-41135A	1	O	
3-5	PMO-CAP PLTE GU/DEV L	JC72-41173A	1	O	
3-6	SPRING-GUIDE DEVE	JC61-00038A	1	O	
3-7	PMO-ACTUATOR_EXIT	JC72-00130A	1	O	
3-8	PMO-HOLDER_EXIT	JC72-00532A	1	O	
3-9	PMO-BUSHING_TERMINAL	*	1	X	
3-10	ELA HOU-OPEN SENSOR	JC96-01584A	1	O	
3-10-1	IPR-BRKT_SENSOR	*	1	X	
3-10-2	CBF-HARNESS COVER	JC39-00041A	1	O	
3-11	IPR-GUIDE-TR	*	1	X	
3-12	IPR-PLATE-TERMINAL	*	1	X	
3-13	IPR-SAW_PLATE	*	1	X	
3-14	PCT-FILM SAW	*	1	X	
3-15	IPR-EARTH_TRANS	*	1	X	
3-16	IPR-GROUND_GUIDE	*	1	X	
3-17	IPR-GROUND_HVPS	*	1	X	
3-18	IPR-GROUND_FUSER	*	1	X	
3-19	IPR-GROUND_DRIVE	*	1	X	
3-20	CBF HARNESS-OPE GND	*	1	X	
3-21	PMO-HOLDER_PR	JC72-00531A	1	O	
3-22	BEARING-PRESSURE R	JC65-10205A	1	O	
3-23	SPRING-PR	*	1	X	
3-24	MEC-ROLLER_PRESSURE	JC75-00130A	1	O	
3-25	PMO-GUIDE_INPUT	*	1	X	
3-26	RMO-RUBBER_FOOT	*	1	X	
3-27	ELA HOU-FUSER ASS'Y220V	*	1	X	
3-28	CBF-HARNESS FUSER	JC39-00042A	1	O	
3-29	ELA HOU-MOTOR GND	JC96-01579A	1	O	
3-30	PMO-BUSHING SHAFT	JG72-40849A	1	O	
3-31	FAN-DC	3103-001085	1	O	
3-32	PMO-GEAR_83/35	JC72-00154A	1	O	
3-33	SPRING-FUSER DR	*	1	X	
3-34	PMO-GEAR_FU_IN 47	*	1	X	
3-35	PMO-GEAR_FU_OUT 47	*	1	X	
3-36	MEC-ROLLER FEED	JC75-00054A	1	O	
3-37	PBA MAIN-SENSOR	JC92-01197A	1	O	
3-38	EMC-HOLDER FEED	*	1	X	

ITSpares.eu

Engine/Frame Lower Assembly and Parts List

SA : Service Available
O : Service available **X** : Service not available

No.	Description	SEC.Code	Q'ty	SA	Remark
3-39	CBF HARNESS-MOTOR GND	JC39-00144A	1	O	
3-40	IRP-BRKT FUSER DRV	*	1	X	
3-41	PMO-HINGE FRONT(L)	JC72-00525A	1	O	
3-42	PMO-HINGE FRONT(R)	JC72-00526A	1	O	
3-43	PMO-COVER PTL	JC72-00534A	1	O	
3-44	ELA HOU-PTL	JC96-02037A	1	O	
3-45	PCT-COVER SHEET LAMP	JC72-00596A	1	O	
3-46	PCT-INSULATOR SENSOR B'D	*	1	X	

IT-Spares.eu

5-4 Fuser Assembly

: Service Passibility Parts

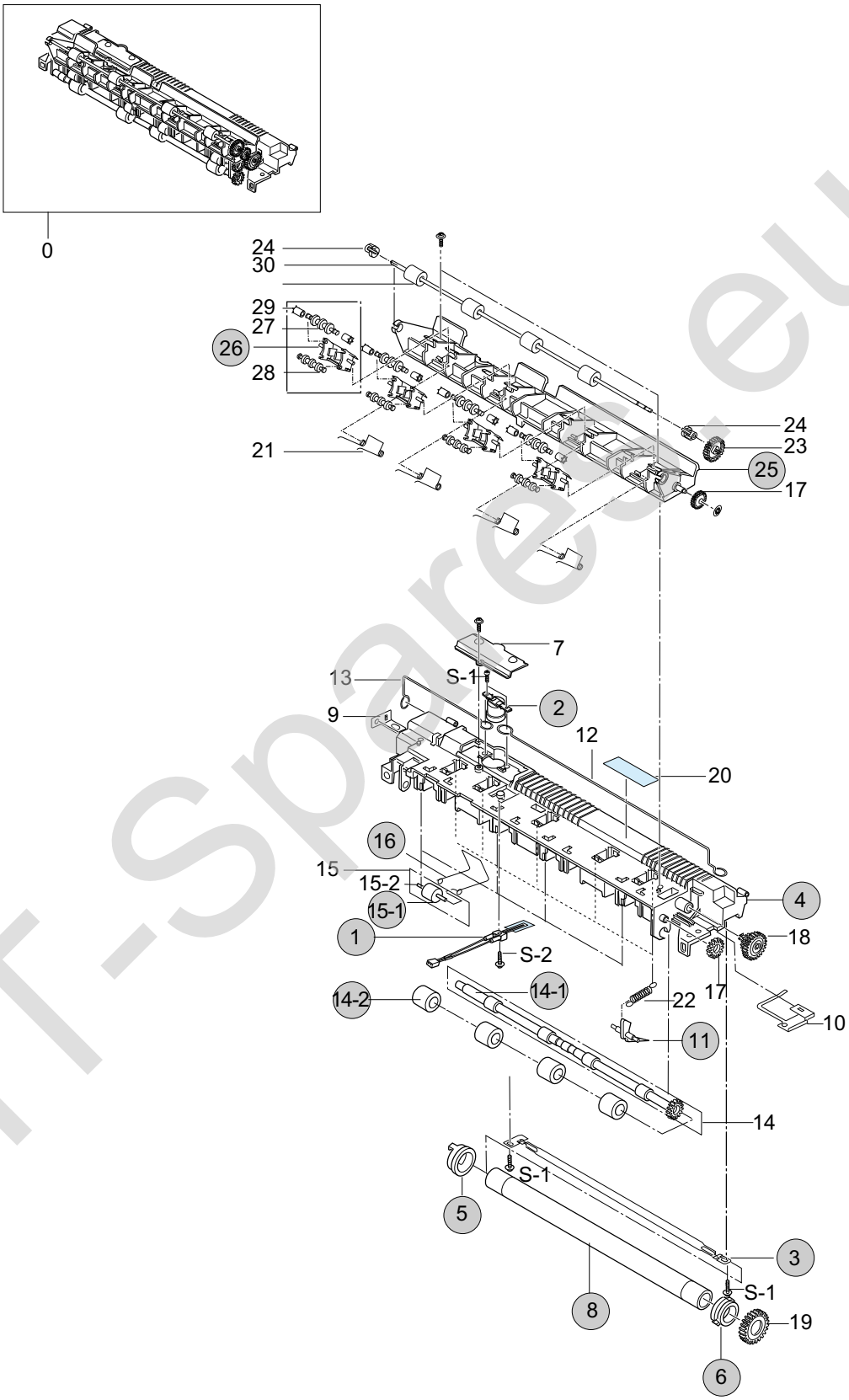

IT-Spares.eu

Fuser Assembly and Parts List

SA : Service Available
O : Service available **X** : Service not available

No.	Description	SEC.Code	Q'ty	SA	Remark
0	ELA HOU-FUSER ASS'Y	*	1	X	
1	THERMISTOR-NTC	1404-001188	1	O	
2	THERMOSTAT-150C	4712-000001	1	O	
3	LAMP-HALOGEN	4713-001136	1	O	
4	PMO-COVER FUSER	JC72-00527A	1	O	
5	PMO-BUSHING H/R, L	JC72-00530A	1	O	
6	PMO-BUSHING H/R, R	JC72-00529A	1	O	
7	PMO-COVER_THERMOSTAT	*	1	X	
8	NPR-ROLLER HEAT	JC71-00012B	1	O	
9	IPR-ELECTRODE_PLATE	*	1	X	
10	IPR-GROUND_FU	*	1	X	
11	PMO-GUIDE CLAW	JC72-41128A	1	O	
12	ELECTRODE-WIRE,1	*	1	X	
13	ELECTRODE-WIRE,S	*	1	X	
14	MEA ETC-SHAFT EXIT	*	1	X	
14-1	PMO-SHAFT_EXIT(Z15)	JC72-00150A	1	O	
14-2	RMO-RUBBER_EXIT	JC73-00017A	1	O	
15	PMO-ROLLER_IDLE EXIT	*	1	X	
15-1	IPR-PIN ROLLER EXIT	JC70-00064A	1	O	
16	SPRING-EXIT	JC61-00017A	1	O	
17	PMO-GEAR_EXIT_DRV16	*	1	X	
18	PMO-GEAR_EXIT_IDLE	*	1	X	
19	PMO-GEAR_FUSER	*	1	X	
20	LABEL (R)-CAU_HOT_FU	*	1	X	
21	SPRING-EXIT DOWN	*	1	X	
22	SPRING-ES, GUIDE CLAW	*	1	X	
23	GEAR-EXIT F/DOWN	*	1	X	
24	BEARING-EXIT FU L	*	1	X	
25	PMO-COVER FUSER F/DOWN	JC72-00527A	1	O	
26	PMO-HOLDER_EXIT_DOWN	JC72-00532A	1	O	
27	PMO-EXIT_DOWN_L	*	1	X	
28	PMO-EXIT_DOWN_S	*	1	X	
29	RMO-RUBBER-KICKER	*	1	X	
30	MEC-UNIT_EXIT, F_DOWN	*	1	X	
S-1	SCREW TAPTITE	*	1	X	
S-2	SCREW TAPTITE	*	1	X	

ITSpares.eu

5-5 Shield Engine Unit Assembly

: Service Passibility Parts

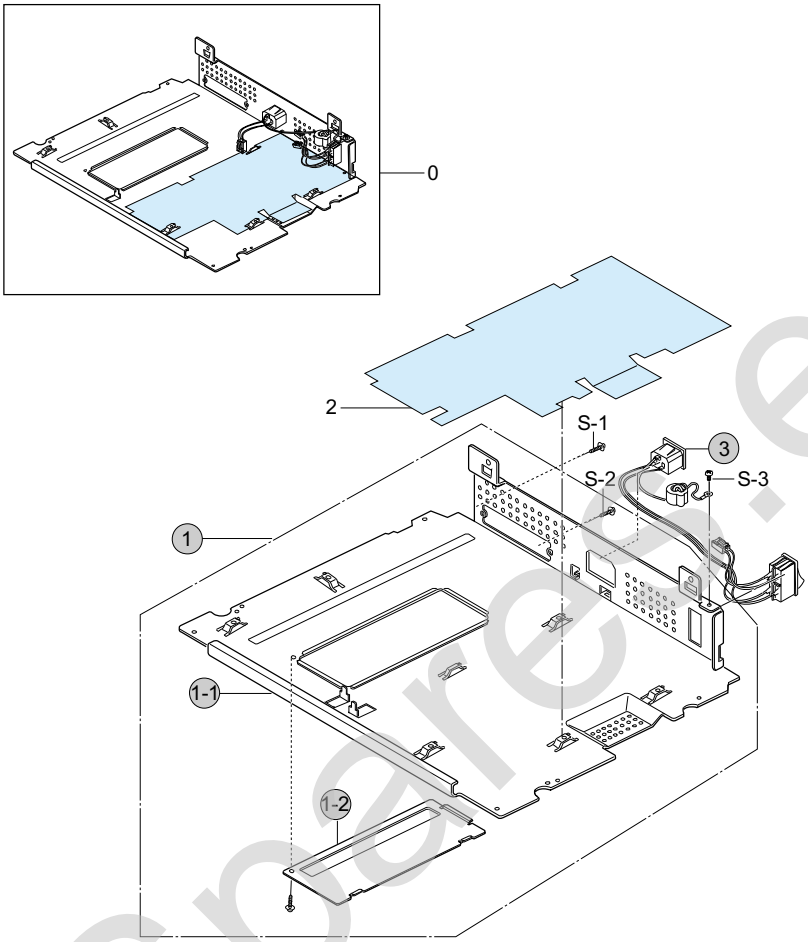

Shield Engine Unit Assembly and Parts List

SA : Service Available
O : Service available **X** : Service not available

No.	Description	SEC.Code	Q'ty	SA	Remark
0	ELA HOU-SHIELD ENGINE	*	1	X	
1	MEC-SHIELD BRKT CONTROLLER	JC75-00105C	1	O	
1-1	IPR-SHIELD ENGINE	JC70-00130C	1	O	
1-2	IPR-BRKT CONTROLLER	JC70-00131A	1	O	
2	PCT-INSULATOR SMPS	*	1	X	
3	CBF HARNESS-INLET ASS'Y	JC39-00134A	1	O	
S-1	SCREW-MACHINE	*	1	X	
S-2	SCREW-TAPTITE	*	1	X	
S-3	SCREW-TAPTITE	*	1	X	

IT-Spares.eu

5-6 RX Drive Assembly

: Service Passibility Parts

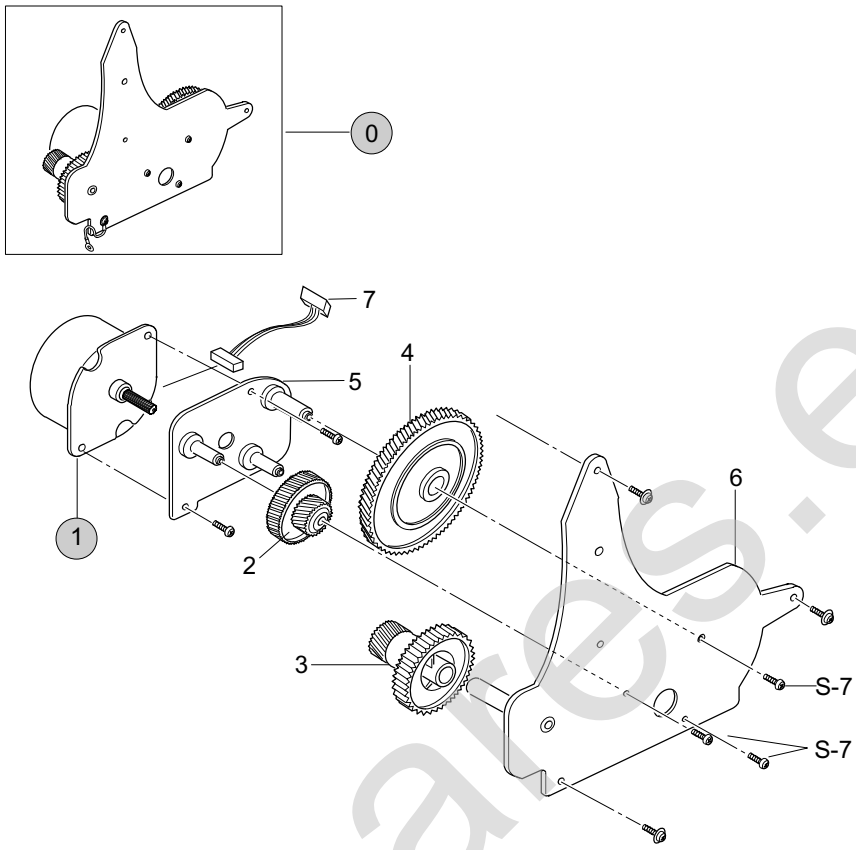

RX Drive Assembly and Parts List

SA : Service Available
O : Service available **X** : Service not available

No.	Description	SEC.Code	Q'ty	SA	Remark
0	ELA HOU-RX DRIVE	JC96-02125A	1	O	
1	MOTOR-STEP	JC31-00005B	1	O	
2	PMO-GEAR_71/28	*	1	X	
3	PMO-GEAR_73/22	*	1	X	
4	PMO-GEAR_132/19	*	1	X	
5	IPR-BRKT_MOTOR	*	1	X	
6	IPR-BRKT_GEAR	*	1	X	
7	CBF-HARNESS_MOTOR	*	1	X	
S-7	SCREW-MACHINE	*	1	X	

IT-Spares.eu

5-7 Plate-Upper Unit Assembly

: Service Passibility Parts

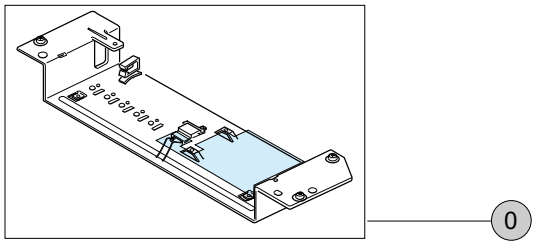

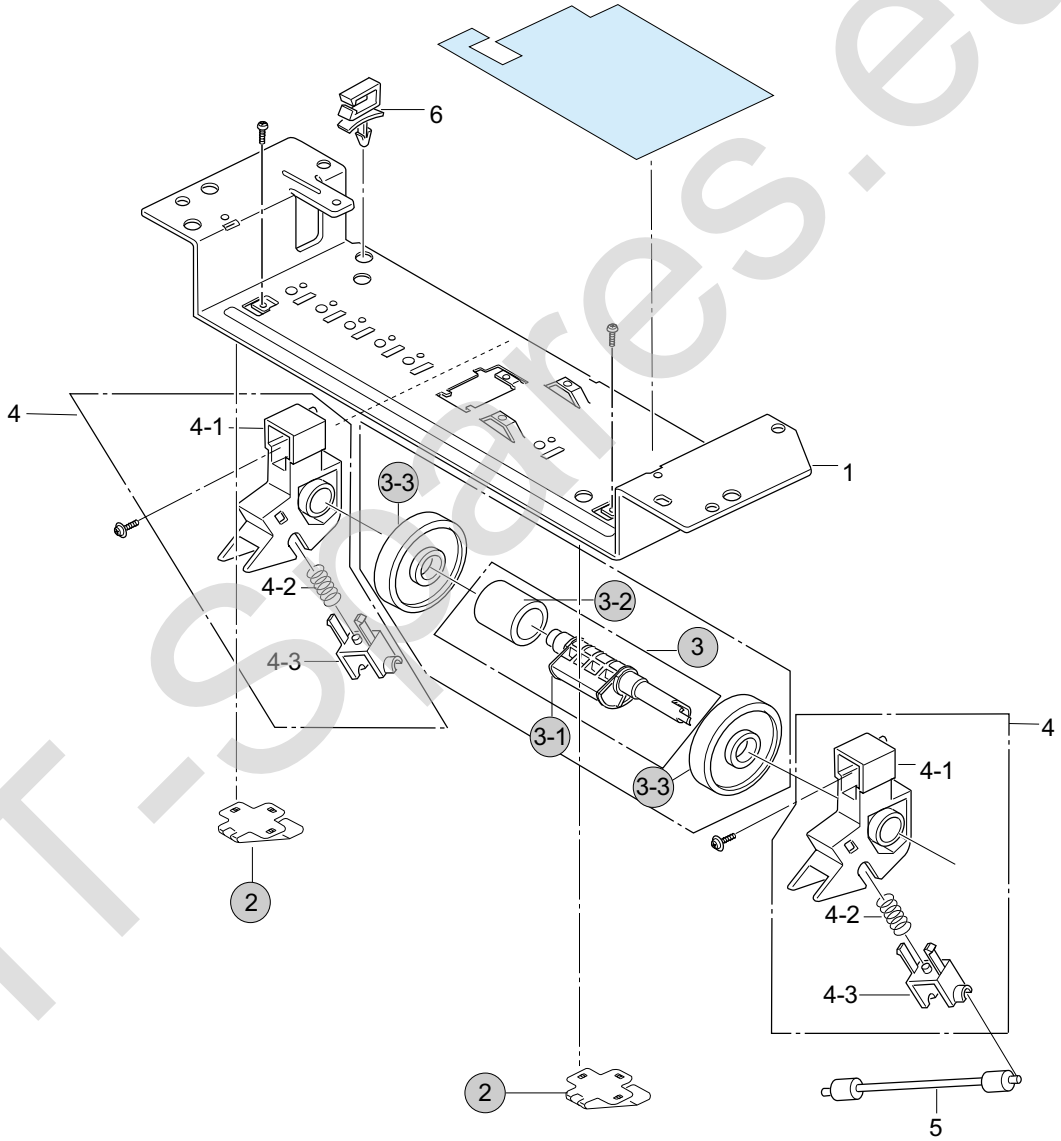

IT-Spares.eu

Plate-Upper Unit Assembly and Parts List

SA : Service Available
O : Service available **X** : Service not available

No.	Description	SEC.Code	Q'ty	SA	Remark
0	MEC-PLATE UPPER	JC75-00111A	1	O	
1	IPR-UPPER-PLATE	*	1	X	
2	IPR-PLATE SPRING DEV	JC70-10223A	1	O	
3	MEA ETC-ROLLER PICKUP	JC97-01308A	1	O	
3-1	PMO-HOUSING_PICKUP	JC72-00109A	1	O	
3-2	RMO-ROLLER_PICKUP	JC73-00018A	1	O	
3-3	PMO-IDLE_PICKUP	JC72-00110A	1	X	
4	MEA ETC-IDLE FEED	*	1	X	
4-1	PMO-HOLDER_PICKUP	*	1	X	
4-2	SPRING-FEED	*	1	X	
4-3	PMO-HOLDER_IDLE,FEED	*	1	X	
5	ICT-ROLLER_IDLE,FEED	*	1	X	
6	CABLE CLAMP	*	1	X	
S-1	SCREW TAPTITE	*	1	X	
S-9	SCREW TAPTITE	*	1	X	

IT-Spares.eu